Global Caché
GC-RG1
General IR Receiver

Global Caché's GC-RG1 is an IR receiver used to capture IR frequencies from 30 KHz to 80 KHz. The GC-RG1 plugs directly in the GC-IRE to capture and digitize IR signals. Receipt of an IR signal is indicated by a blue LED located behind the front lens. Additionally, the GC-RG1 will directly plug into and operate within a Xantech or Xantech-compatible environment.

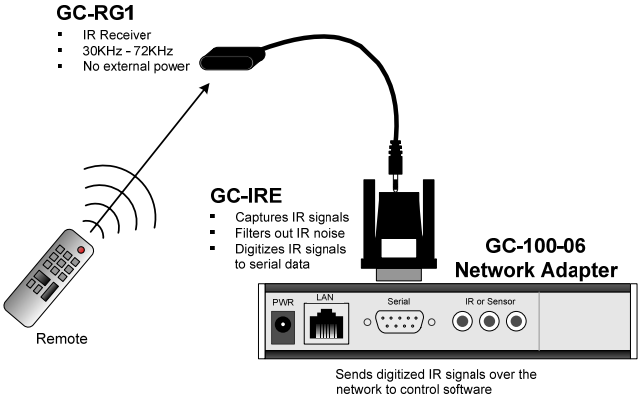

The IR receiver is plasma and fluorescent friendly providing proper GC-RG1 placement. Unwanted signals must not be allowed within the receiver's viewing angle. The IR sensor is set back in the GC-RG1 to shield it from both infrared and electromagnetic noise. Place the GC-RG1 to avoid direct line-of-sight aim at noise sources, such as plasma screens and fluorescent lights. Keep noise sources out of the GC-RG1's field-of-view for proper operation.

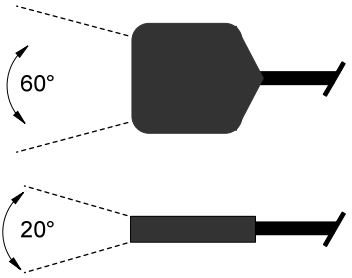

Field of View

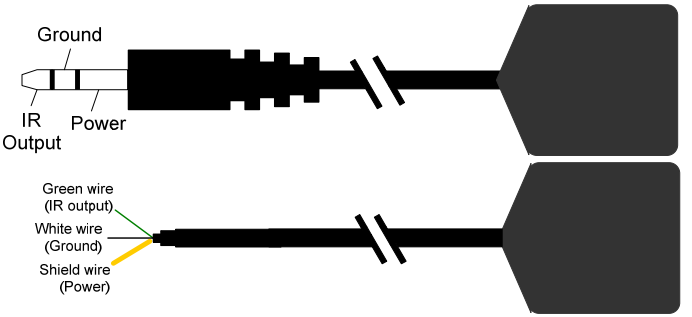

The GC-RG1 employs a 3 meter (~10ft) cable with a 3.5mm jack for easy installation and connection to the GC-IRE or Xantech distribution block. The cable may be extended to several 100 meters providing the total cable capacitance does not exceed 15,000pF. A typical CAT5 or audio cable is 60pF per meter permitting 250 meter (~ 800ft) cable run without signal amplification.

Specifications:

• Use with the GC-IRE	To digitizes IR signals.
• Xantech compatible	Yes
• IR frequencies capture range	30 KHz to 80 KHz
• Capture distance	8m - 12m (26' - 40') remote dependent
• Case size HxWxL.	10mm x 21mm x 25mm (.40" x .82" x .95")
• Cable type	3 meter shielded with 3.5 mm stereo jack
• IR signal indicator	Blue LED
• Viewing angle (left, right)	30 degrees
• Viewing angle (top, bottom)	10 degrees
• Power requirements	7V - 15V@3mA (no load)
• Output impedance (short-circuit protected)	150 Ohms

Note: A power supply is not required when used with the GC-IRE.

Global Caché, Inc.
160 East California Street, PO Box 1659
Jacksonville, Oregon 97530
Phone (541) 899-4800
Fax (541) 899-4808
www.globalcache.com
Support: support@globalcache.com /Sales: sales@globalcache.com
Copyright ©2007 Global Caché, Inc. All rights reserved.
PN: 122106-01 ver3/Information subject to change without notice.