Global Caché
GC-CXG
Converter

The Global Caché GC-CXG converts Xantech and Xantech compatible IR emitter output voltages to the proper levels required by the Global Caché GC-IRE IR Extender. The GC-IRE translates IR signals to serial ACSII text, which can be read by a PC serial port or over the network utilizing the GC-100 Network Adapter's RS232 serial port. Simply plug the 3.5mm stereo jack into a Xantech distribution box (emitter output) and the other end into the GC-IRE. The GC-IRE is responsible for filtering out noise and providing good IR commands before being converted to serial ASCII text. IR commands are represented as comma delimited ASCII text. (See the API specification for IR serial formats on Global Caché's website.) In the following installation, a SpeakerCraft AT-1.0 emitter output provides the IR signal for transmission over a network. First, the GC-CXG converts the IR signals for the GC-IRE; then the GC-IRE filters and serializes the IR data for the RS232 serial port on the GC-100. Finally, the GC-100 transmits the serial IR data over the network.

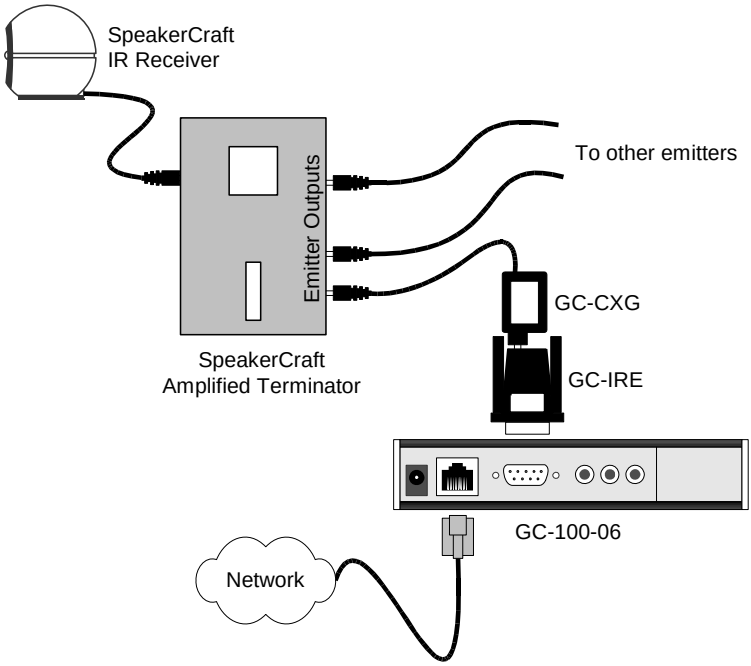

The GC-CXG used with a SpeakerCraft Amplified Terminator and IR Receiver

The GC-CXG is optically isolated to avoid noise and ground loop issues found when systems are powered by multiple sources. When used with the GC-IRE, the GC-CXG requires no power supply and supports the full IR frequency range from 30 KHz to 500 KHz. When extension cables are needed for longer runs, to avoid high-frequency degradation they should not be used between the GC-IRE and GC-CXG.

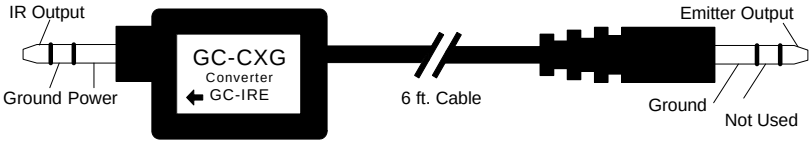

Specifications	Minimum	Typical	Maximum
Frequency range	30KHz	-	500KHz
Vcc, Supply voltage	4.50V	-	5.50V
Supply current	-	1.2mA	1.6mA

Global Caché, Inc.
160 East California Street, PO Box 1659
Jacksonville, Oregon 97530
Phone (541) 899-4800
Fax (541) 899-4808
www.globalcache.com
Support: support@globalcache.com /Sales: sales@globalcache.com
Copyright ©2007 Global Caché, Inc. All rights reserved.
PN: 041304-01 ver3/Information subject to change without notice.