Global Caché
GC-CGX
Converter

The Global Caché GC-CGX Converter translates GC-100 Network Adapter IR outputs to Xantech, Niles and SpeakerCraft IR inputs. With the GC-CGX, GC-100 IR commands can be transmitted over third party IR distribution systems. Simply plug the GC-CGX into the desired GC-100 IR output and plug the other end into the IR input (receiver) of an IR distribution box, such as the Xantech 789-44 Connecting Block.

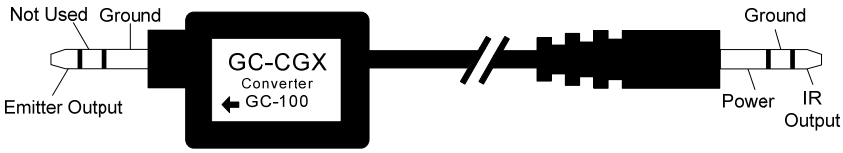

The GC-CGX is optically isolated to avoid noise and ground loop issues found when systems are powered by multiple sources. When properly connected, the GC-100 IR outputs will operate and function as if the commands were sent by the third party device. When used with a GC-100, the GC-CGX requires no power supply and supports an IR frequency range from 30 KHz to 500 KHz; third party devices typically do not exceed 120 KHz. Do NOT use extension cables between the GC-100 and GC-CGX; this would cause high-frequency degradation. Also, when using an extension cable between the GC-CGX and the distribution box, it should not exceed 12 feet for frequencies above 100 KHz.

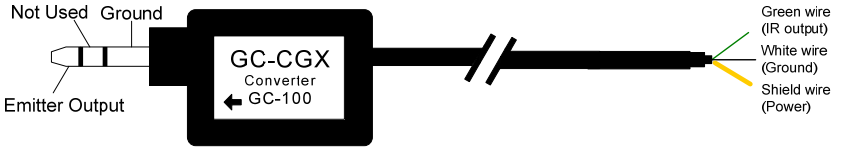

If no 3.5 mm jack is available on the third party device, cut the CGX cable a few inches from end of the plug (not the GC-100 side.) and connect it according to the diagram above. Some vendors have a “Status” line which is not used with the GC-CGX and will be unconnected.

In the following installation a GC-CGX is employed to transmit GC-100 IR commands to emitters attached to the Xantech 789-44 Connecting Block.

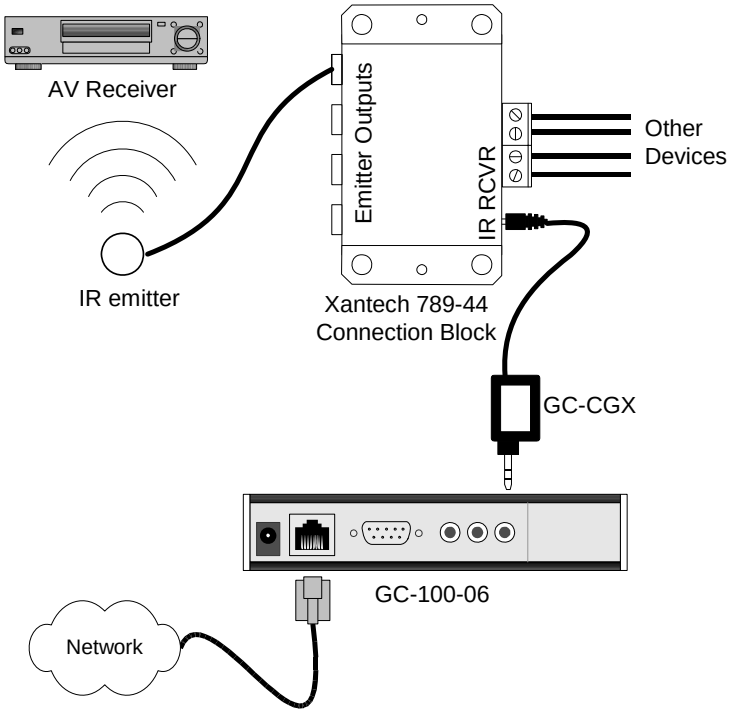

The GC-CGX used with a Xantech 789-44 and AV Receiver

Global Caché, Inc.
160 East California Street, PO Box 1659
Jacksonville, Oregon 97530
Phone (541) 899-4800
Fax (541) 899-4808
www.globalcache.com
Support: support@globalcache.com /Sales: sales@globalcache.com

Copyright ©2007 Global Caché, Inc. All rights reserved.
PN: 041304-01 ver5Information subject to change without notice.

Support: support@globalcache.com /Sales: sales@globalcache.com
Copyright ©2007 Global Caché, Inc. All rights reserved.
PN: 041304-01 ver5Information subject to change without notice.