The serial device attaching to the GC-100 will likely employ a 9 or 25 pin DB connector. Following is the standard wiring configuration for a serial cable. It is not guaranteed that the standard has been followed, but it is a good starting place. For example, when connecting the GC-100 male serial connector to A/V equipment that also uses a male DB9 connector pins 2 and 3 would need to crossover. Pin 2 on the GC-100 would connect to pin 3 on the A/V device.

	GC-100 DB9 male	DB9 male	DB9 female	DB25 male	DB25 female
Data					
RxD	2	3	2	3	2
TxD	3	2	3	2	3
Gnd	5	5	5	7	7
Data Flow Control					
RTS	7	8	7	5	4
CTS	8	7	8	4	5
Modem Controls					
DTR	4	6	4	6	20
DSR	6	ignored by the GC-100			

IR output and sensor input share a common connector and indicator on the GC-100. Each 3.5mm audio connector is independently configured using the internal web pages or the GC-100 Discovery & Configuration Utility available for download from www.globalcache.com. Each connector has three contacts configured as either an infrared (IR) output, Control-S output (IR/no carrier), GC-BL2 IR Blaster output, or sensor input, as shown below.

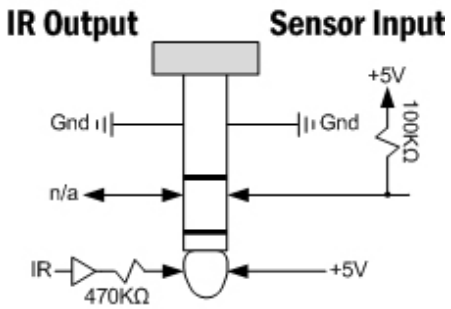

3.5mm Audio Connector

When configured as an output the indicator will blink as an IR command is transmitted. When functioning as a sensor, the indicator is "on" when a positive input or no connection is present. The maximum sensor input voltage is ±24V, with an "on" indication for voltages greater than 2.5V and "off" when less than 0.8V with an input impedance of ~100KΩ.

When selected, IR commands can be transmitted without their carrier frequency, as waveform envelopes. This is used for direct audio/video inputs, such as Control-S, or for modulating RF signals.

When configured as GC-BL2 Blaster mode, the connector is to be used with a GC-BL2 IR Blaster. This mode does not support IR blasters provided by other manufacturers.

Sensor Notifications are used to automatically signal changes in sensor state. Any connector configured as an input with auto-notify will send notifications. The state of a sensor can also be polled at any time.

Relays are used for switching devices on and off. The contacts are "normally open" and rated for 500mA at 24V (DC or AC). The mating connectors use screw terminals to attach wiring. Relay contacts are non-directional, and wires may be connected in any order.

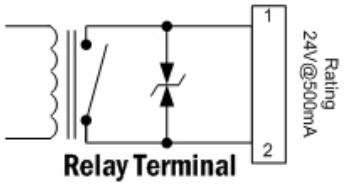

Relay Terminal Block Connector

Relay contacts are protected against transients greater than 150 volts caused by switching inductive loads, such as motor and relays. The transient voltage suppressor (TVS) eliminates contact arching by clipping positive and negative voltage spikes that exceed 150 volts.

This device complies with Part 15 of FCC rules and with ICES-003 of Industry Canada. Operation is subject to the following two conditions:

(1) This device may not cause harmful interference, and
(2) This device must accept any interference received, including interference that may cause undesired operation.

Global Caché, Inc. - 160 East California Street - PO Box 1659
Jacksonville, Oregon 97530 - Phone (541) 899-4800
Fax (541) 899-4808 - www.globalcache.com
Support: support@globalcache.com
Copyright ©2008 Global Caché, Inc. All rights reserved.
PN: 030127-02 ver.13/Information subject to change without notice.

Global Caché

Quick Start Guide

Global Caché GC-100-12/18 Network Adapter

The GC-100-12 and GC-100-18 Network Adapters connect diverse and previously unconnected devices and appliances in a network-based home, school or business. Using many commonly needed controls and sensor inputs in one box, the GC-100 provides an easy way for controlling real-world devices, reducing the time and complexity of an installation by eliminating piggybacked components and multiple power supplies. By simply sending commands over the network, your audio/visual equipment is turned to the proper volume by infrared (IR), shades are lowered with relays, and your favorite DVD is selected through serial communications; and all started with the push of a button. As a result of using open standards (for example, TCP/IP), any networked device, such as your PC, can send and retrieve GC-100 data. With the GC-100, a variety of devices can be connected to control and monitor the environment over a network or even the Internet.

The GC-100 is designed to work with many of the popular control software packages. These packages contain software drivers needed for the proper operation of the GC-100, as well as, an easy-to-use interface for configuring your automated environment. It is required that such a package be employed when using the GC-100 product family.

Getting started is simple. All it requires is connecting power, configuring the unit, and attaching cables. This guide provides a step-by-step method to get you up and running quickly and easily with a discussion of each connector's pin out, web page configuration, and specification.

The GC-100 Discovery and Configuration Utility is available for download from the support section on our website (www.globalcache.com). Once installed, the application will listen for the GC-100 on the network and display it in a list. It may take up to 60 seconds for the all GC-100s on the network to be listed. Configuration settings can ve view and edited by highlighting a GC-100 in the list and pressing the Configure button.

Power is supplied by an AC wall adapter rated for 9V to 18V DC@300mA. Shortly after applying power all the IR indicators will momentarily turn on then off signifying completion of the self-test. The GC-100 is ready for operation after the power (PWR) indicator is on.

LAN connection is used for all communication over the network and for configuring the GC-100. The GC-100 is set to support DHCP by default. To locate the GC-100 on the network and determine its IP address, download and install the GC-100 Discovery & Configuration Utility from www.globalcache.com. Once installed, the utility provides a list of GC-100s on the network and allows the user to change the settings of those found.

In most network environments, the GC-100 can also be accessed by name. The network name of a GC-100 is "GC100_XXXXXXXXXXXX_GlobalCache" where the Xs are the 12 character MAC address printed on the bottom of the GC-100. For example, if the MAC address was "000C1E012345" then the GC-100 network name would be "GC100_000C1E012345_GlobalCache."

If using a crossover cable connected directly to a computer, or if a DHCP server is not available, the GC-100 will use the default IP address of 192.168.1.70. The PC must also be on the same network with an address such as 192.168.1.102. The "LINK" indicator on the LAN connector will light when the cable is plugged in properly. After establishing a link, the GC-100's web pages are accessible from a browser by entering its IP address.

A suitable static IP address can also be entered for your network environment, making sure the GC-100's IP address is outside the network's DHCP partition, if DHCP is used. In addition the default gateway address and subnet mask will need to be set before installing the GC-100. Once the GC-100 is on your network, further configuration can be accomplished through the new IP address.

Except for serial, all data commands are sent over TCP/IP Port 4998. This includes infrared, sensor, and relay commands. Each serial connection has a unique port number for communication, starting with Port 4999 for serial connector 1, Port 5000 for serial connector 2, and so on.

Factory defaults can be set during power up by connecting pins 7 and 2 on connector SERIAL 1 with a wrap back connector or a flat bladed screw driver. (Refer to the Serial DB9 Connector diagram for pin locations.) IR indicator 1 will blink on, then all the IR indicator lights will blink on, then all of them will go off. This indicates the GC-100 has been set to factory defaults, including Configuration Lock, which defaults to disabled.

Web pages are used to configure the GC-100 for proper operation in a particular environment. Parameters are selected by pull down menus and put into effect after executing "Apply." The GC-100 resets, blinking all indicators on then off, to complete the update.

Serial communication utilizes a male (9 pin) DB9 connector with active signals on the pins shown in the diagram. Unfortunately, serial standards are not always adhered to, and special attention must be given when connecting serial cables. For proper serial communication cable configuration, baud rate (communication speed) parity, and flow control must be correct. At a minimum, to send and receive serial data TxD, RxD, and Gnd must be connected to the other serial device. These signal locations will depend on the mating connector's type and gender. Typically, communications can be established by a trial and error method of swapping the TxD and RxD lines. Incorrect wiring will not harm serial drivers. Also, flow control must be disabled or asserted for communications to start. If erroneous characters are transmitted, it is usually an indication of an incorrect baud rate setting.

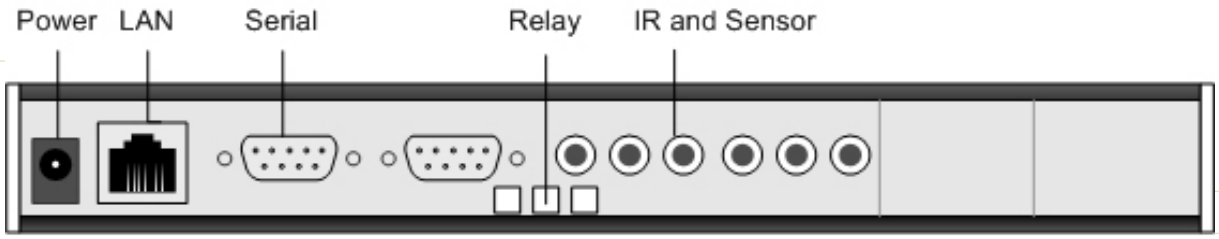

GC-100-12 Front Panel

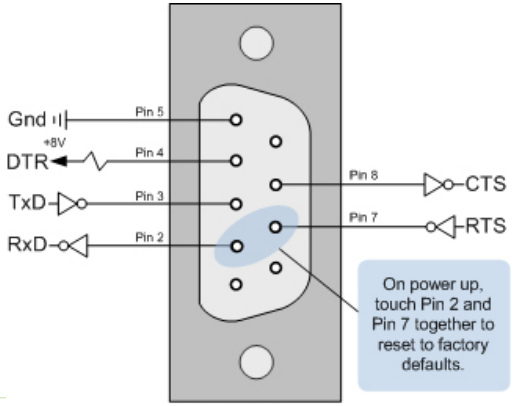

Serial DB9 Connector

There are two types of flow control: RTS/CTS for data flow and DTR/DSR for modem control. The GC-100 does not use modem flow control and will always assert the DTR line and ignore DSR. When data flow control is used, the GC-100 will stop its transmission when its CTS signal is asserted by the other device. When receiving data the GC-100 may assert RTS to signal the other device to stop its transmission. In a typical control environment, serial devices usually communicate with short and infrequent commands. Hence, some serial devices may not have flow control signals. This is usually not a concern, since a serial input buffer is much larger (256 bytes) than the transmitted data commands. In these cases, the GC-100 flow control should be disabled. However, to avoid potential character loss, it is a good rule to use flow control when it is available on serial devices. The GC-100 performs flow control by asserting RTS when the input buffer goes beyond 192 bytes, and de-asserting RTS when it falls below 64 bytes. In either case, the GC-100 records all serial buffer overflows and maintains a count on the Network web page.