GC-100 Network Adapter

www.globalcache.com www.globalcache.com www.globalcache.com www.globalcache.com www.globalcache.com www.globalcache.com

Add Any Device to a Network in Minutes



Global Caché's GC-100 family of Network Adapters connects almost any piece of electronic equipment to a network so that it can be accessed, controlled, and maintained from anywhere over a network or the Internet. Our Network Adapters employ a unique and transparent architecture that is engineered to seamlessly integrate with all types of control, automation, and monitoring environments. Compact and economical, they provide a quick, simple and cost-effective way to bring the advantages of device networking to homes, educational institutions, businesses, and houses of worship.

GC-100 Models

GC-100-06

- Power input
- Network connection
- Serial port
- Three independent IR outputs or sensor inputs
- Dimensions: 6.0" L x 3.0" D x 1.3" H

GC-100-12

- Power input
- Network connection
- Two serial ports
- Three relay connections
- Six independent IR outputs or sensor inputs
- Dimensions: 12.0" L x 3.0" D x 1.3" H

GC-100-18

- Same configuration as GC-100-12
- Dimensions: 17.5.0" L x 3.0" D x 1.3" H

GC-100-18R

- Same configuration as GC-100-18 with rack mount kit installed
- 1U rack height

Key Features

- Network virtually any device in minutes
- Connects infrared (IR) devices to a TCP/IP network, including IR input
- Connects RS232, Sony Control-S devices, and sensors to a TCP/IP network
- Connects contact closure (relay) devices to a TCP/IP network
- Works well with wireless
- Low profile, stylish enclosure
- Peripheral equipment includes IR learning and IR input over a TCP/IP network
- Available in 3 sizes with a 19" rack mount version
- Silent, fan-free, environmentally friendly RoHS compliant

©Copyright 2008 Global Caché, Inc. All Rights Reserved.
All brand names, products, and trademarks are the property of their respective owners. Information subject to change without notice.
PN: 032706-01 ver. 4/Effective June 2008

Technical Specifications

Power Input

- 9 to 18V DC@300mA (wall power adapter included)
- International 220V available

LED indicators

- Power
- Network activity
- Link status
- IR transmission
- Sensor input state
- GC-100 visual ID

Setup

- Integrated web server for easy configuration
- Configure through TCP/IP set up commands

Discovery & Setup Utility

- Included Windows-based software simplifies GC-100 network discovery of units and setup
- AMX beacon support

Network Interface

- Connector: RJ45
- Protocol: 10 Base-T Ethernet
- Standards: TCP, DHCP, HTTP

Serial Interface

- Connector: Male DB9
- Data Rates: 1200 baud to 57.6 Kbaud
- Parity: odd, even, none
- Flow control: bi-directional hardware RTS/CTS
- IR input: utilizing a GC-IRE and GC-RG1, IR commands are received via RS232 port.

IR & Sensor Interface

- Connector: 3.5mm stereo jack
- Selectable IR outputs or sensor inputs per port
- IR input: IR commands received via RS232 port utilizing GC-IRE and GC-RG1
- IR emitter supplied for each IR port
- GC-BL2 IR Blaster support

Relay Interface

- Connector: screw terminal plug, 24V AC/DC@.5A, N.O. contact with transient voltage suppression
- Capability: contact closures

Certifications

- FCC (Part 15, Class B), C-tick, CE
- RoHs compliant

Software

- Product
  - GC-IRL Learner Utility
  - Discovery & Setup Utility
- Development and Testing
  - GC-100 Test Utility
  - GC-CCF Conversion Utility
  - GC-Scan Test Utililty
  - IR Test Utility

Warranty

- One year limited warranty
- Support available through phone and email, as well as extensive online library

Connect Devices to a Network with a GC-100

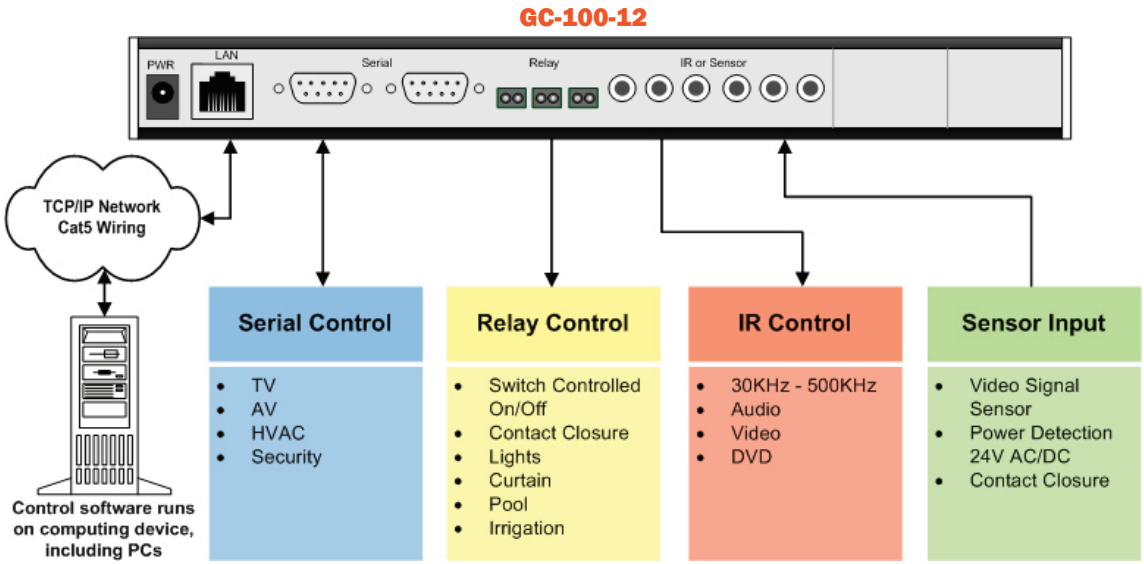

CABA

CEA Consumer Electronics Association MEMBER

infoComm Member INTERNATIONAL

CEDIA CUSTOM ELECTRONIC DESIGN & INSTALLATION ASSOCIATION Member

Global Caché

Corporate Headquarters:
160 East California Street
PO Box 1659
Jacksonville, Oregon 97530 U.S.A.
Telephone: 541-899-4800
Fax: 541-899-4808
www.globalcache.com - info@globalcache.com